RoHS Compliant

REV.	ECN NO.	DESCRIPTION	REVISER	DATE
A1		变更料号	FAN SHA	11.10.18

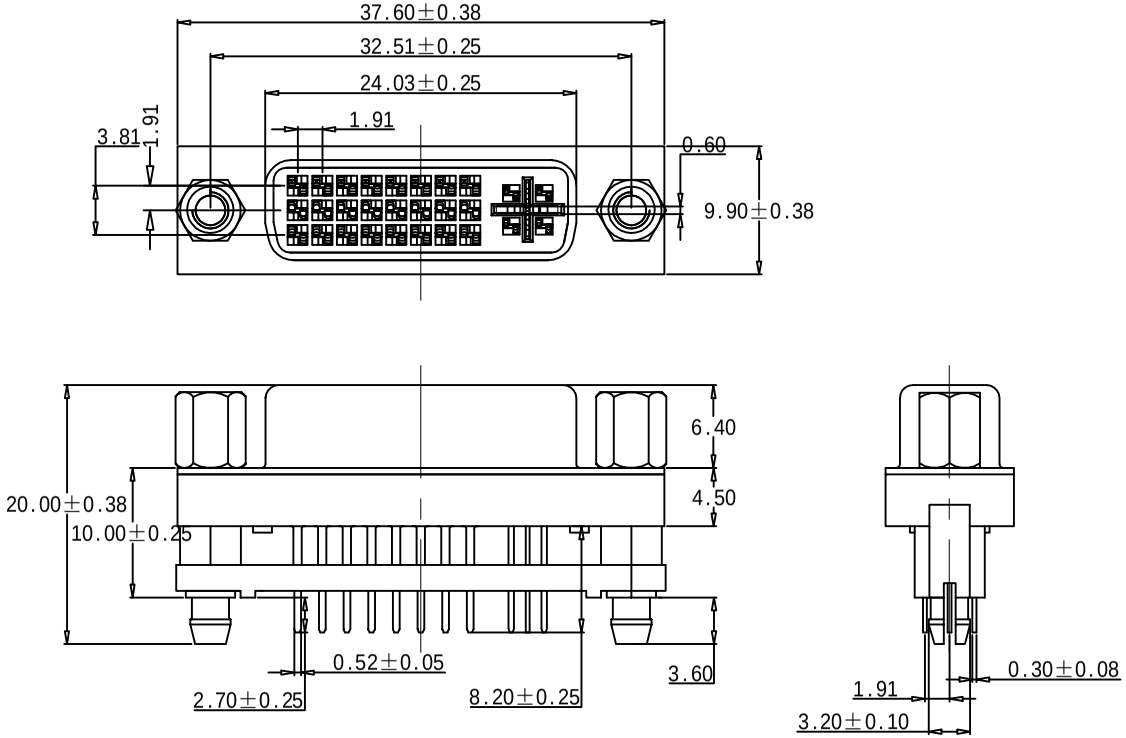

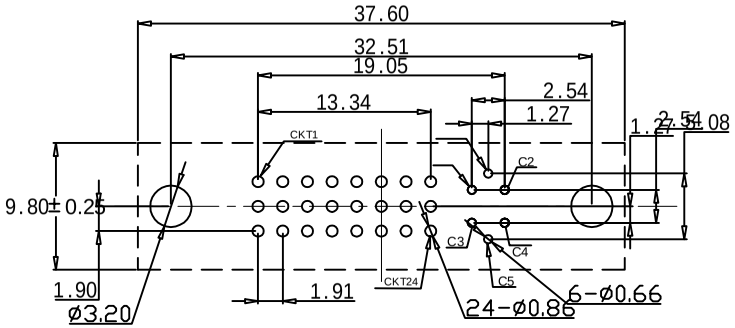

P.C.B LAYOUT

NOTE:

1.MATERIALS AND FINISHED
INSULATOR : PA66+30% GF UL 94V-0,
SHELL : STEEL, NI OR SN FINISHED
CONTACT MATERIAL : BRASS, SELEVITE GOLD FINISHED
RIVETED INSERT: BRASS MATERIAL ,TIN FINISHED
WITH #4-40 THREADED ASSEMBLED

2.ELECTRICAL CHARACTERISTICS
CURRENT RATING : 1.5 AMP DC
VOLTAGE RATING: 40 V DC
CONTACT RESISTANCE :20 MILLIOHMS MAX.
DIELECTRIC WITHSTANDING VOLTAGE : 500 V AC MIN.
INSULATION RESISTANCE : 1000 MEGAOHMS MIN.

3.MECHANICAL
MATING FORCE:4.5Kgf MAX.
UNMATING FORCE:1.0-4.0 Kgf

4.ENVIRONMENTAL
OPERATING TEMPERATURE: -55°C ~ +85°C
STORAGE TEMPERATURE:-55°C ~ +105°C

5.HOW TO ORDER:

DV F S 2 -245 X X X X N-B X 3 1 0

- F: Female
- 245: 24+5Pin
- X: S:Selevite Gold Bright TIN; M:Selevite Gold Matte TIN
- X: 1:1u"; 2:2u"; 3:3u"; 6:10u"
- X: 3.FULL SN; 5.FULL NI
- X: B:Black; W:WHITE
- N: N:PA66
- B: A:No screw type; B:Ass'y screw type; C:Attach screw type
- X: SCREW G:5.8*9.5 Copper Alloy; H:5.8*9.5 STEEL

比例(Scale):1:1	图号(DWG NO.)	C-DVFS2-17	BossConn
单位(Unit):mm	设计(Design)	FAN SHA	
未注公差 Tolerance Unspecified X.X ±0.35 X.XX ±0.25 X.XXX ±0.15 X.° ±2° X.X° ±1°	审核(Checked)		品名(Title): DVI(24+5)180度插板式,铆铜柱 10.0mm,尾端8.2mm,锁5.8*9.5螺丝
	核准(Approved)		
	页次(Sheet)	1 OF 1	
	版次(Rev.):A1		料号(P/N): DVI-STRF-CN02