RoHS Compliant

CUSTOMER DRAWING

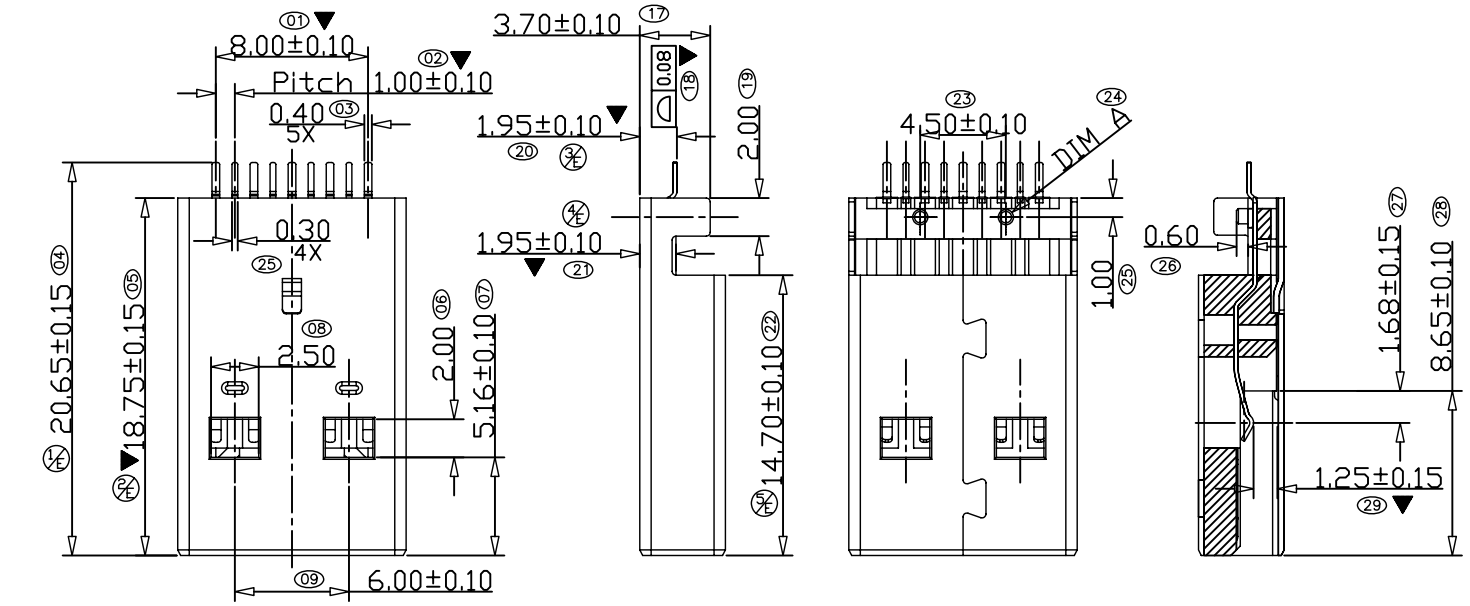

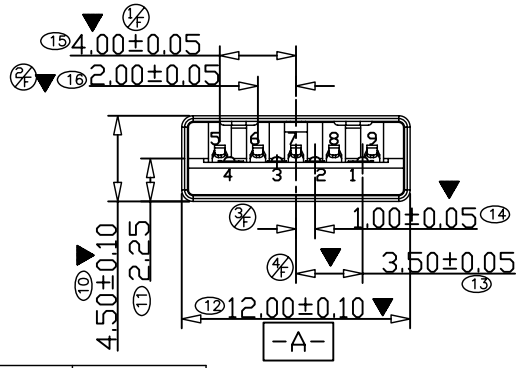

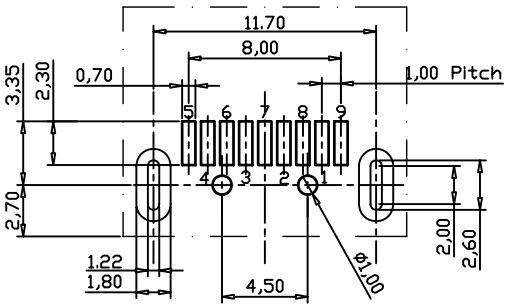

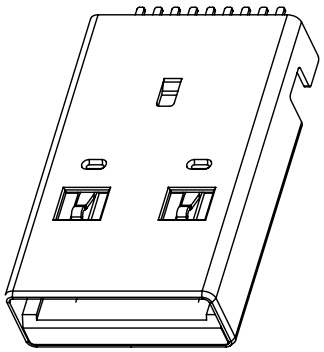

LAYOUT P.C.B

NOTE:
1. MATERIAL:
1.1 INSULATOR:LCP UL 94V-0
1.2 CONTACT:BRONZE(T=0.20mm)
1.3 SHELL:SPCC(T=0.30mm)
2. ELECTRICAL CHARACTERISTICS;
2.1 CONTACTRESISTANCE:30mΩ MAXIMUM
2.2 CONTACT CURRENT RATING:1.5AMPERES
2.3 DIELECTRIC WITHSTANDING VOLTAGE:500 V R.M.S.
2.4 INSULATION RESISTANCE 1000 MEGOHMS MIN
2.5 OPERATING TEMPEROTURE:-40° C ～ 85° C
3 MECHANICAL CHARACTERISTICS:
3.1 MATING FORCE:3.57kg MAX
3.2 UNMATING FORCE:1.02kg MIN
3.3 DURABILITY:MANDATORY:5,000 CYCLES
4. "▼"FOR MAJOR DIM

PART NO

932-*8*1*-*9*
1 2 3 4 5 6 7 8 9

1 932:USB SERIAL成品

2 SHELL &PLATING CODE
1:COPPER,NICKEL PLATING
0:SPCC,NICKEL PLATING

3 8流水号

4 MATERIAL& COLOR CODE
0: LCP,BLUE COLOR
1: LCP,BLACK COLOR
2: LCP,RED COLOR

5 SHELL
1:铁壳脚长3.7

6 POST CODE
1: POST尺寸ø0.8,高度0.6
2: POST尺寸ø1.2,高度0.6

7 电镀
0: NO PLATED 1: GOLD FLASH
2: 3u" GOLD 3: 5u" GOLD
4: 10 u" GOLD 5: 15u" GOLD
6: 30u" GOLD

8 RoHS Compliant & Lead Free

9 包装方式 1: TRAY PACKAGING
2: TAPE REEL PACKAGING

Pin NUMBER	SIGNAL NAME
1	VBUS
2	D-
3	D+
4	GND
5	StdA_SSRX-
6	StdA_SSRX+
7	GND_DRAIN
8	StdA_SSTX-
9	StdA_SSTX+
Shell	Shield

ECN. NO	REV	DATE	DESCRIPTION	CHANGED	APPROVED
——	F	05.12.11'	增加管控尺寸	DOREN	
——	E	10.12.22	变更长度 1/E — 5/E	DOREN	
——	D	10.11.19	端子凸包加宽、加长，新增规格	Jesse	

▼= Places
DIM NO. ⊗⊗
SCALE: 1:1
SHEET: 1 OF 1
UNIT: mm

TOLERANCES UNLESS

X. ± 0.30	X° ± 3°
.X ± 0.20	.X° ± 2°
.XX ± 0.15	.XX° ± 1°
.XXX ± 0.05	.XXX° ± 0.5°

BossConn

DESIGN: DOREN DATE: 05.12.11'
CHECKED: DATE:
APPROVED: DATE:

USB3.0 A PLUG SMT TYPE
ASS'Y(1.95mm)

PART NO: USB3-AM-C002
SIZE: A4
DWG NO:
REV: F