REV.	ZONE	DESCRIPTION	DESIGN	DATE
B		NEW		

RoHS Compliant

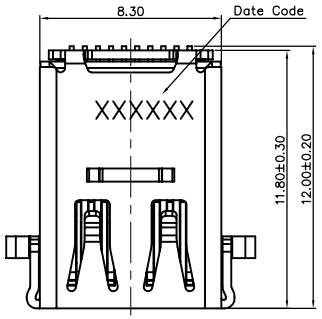

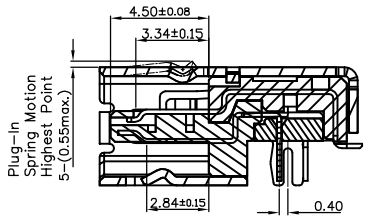

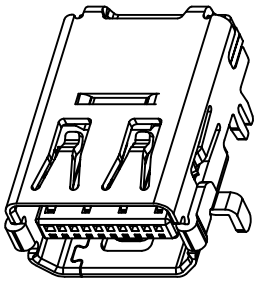

3D View

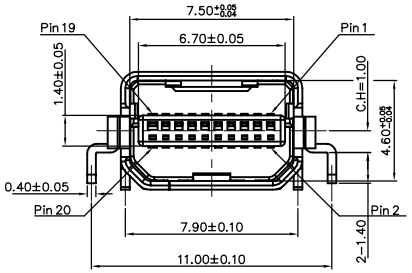

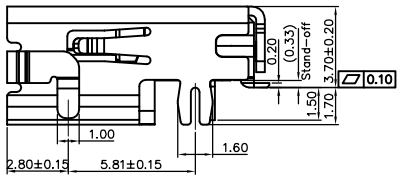

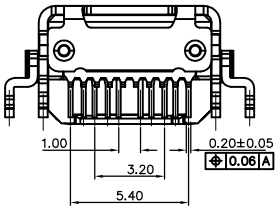

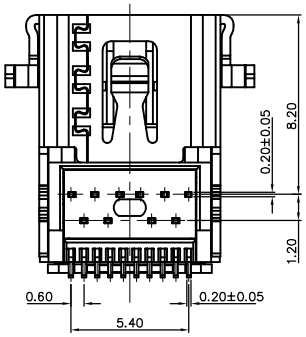

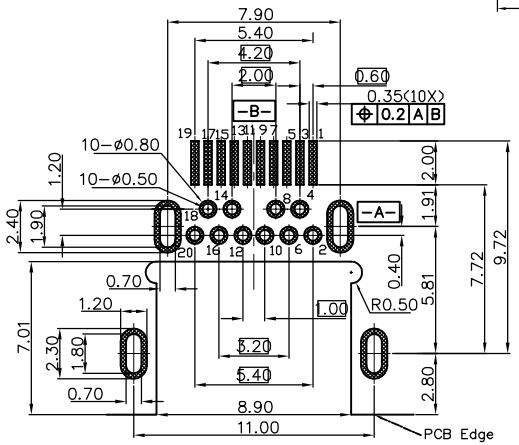

Recommended P.C.B Layout (Top View)
(Tolerance: ±0.05mm)

Notes:
1.Material Specification:
1-1.Housing: LCP+30% G.F UL94 V-0 Black.
1-2.Contact: Copper Alloy (C2680) T=0.20mm.
1-3.Shell: Stainless Steel (SUS304) T=0.40mm.
2.Plating Specification:
2-1.Contact: Gold Flash on Contact area, matte Tin 60μ" min. on Tails,
and 50μ" min. Nickel overall. .
2-2.Shell: Nickel plated..
3.Mechanical Performance:
3-1.Insertion force: 44.1N (4.5kgf) max.
3-2.Withdrawal force: 9.8N~39.2(1.0~4.0kgf).
3-3.Durability: 5,000 cycles.
4.Electrical Performance:
4-1.Current rating: 0.5A.
4-2.LLCR: Contact: 30mΩ max.(initial), Shell: 50mΩ max(initial).
4-3.Insulation Resistance:
A:unmated: 100MΩ min. at 500V DC.
B:mated: 10MΩ min. at 150V DC.
4-4.Dielectric withstand voltage:
150V AC/60s(mated), 250V AC/60s(unmated).
5.IR Reflow:
The peak temperature on board shall be maintained for 10 seconds at 260±5℃.
6.Operating temperature range: -35℃~105℃(without loss function).
7.All parts RoHS and Reach compliant.

Mini DisplayPort Connector Pin Assignment

Pin Number	Signal Assignment	Pin Number	Signal Assignment
1	GND	2	In
3	Out	4	CONFIG
5	Out	6	CONFIG
7	GND	8	GND
9	Out	10	Out
11	Out	12	Out
13	GND	14	GND
15	Out	16	I/O
17	Out	18	I/O
19	GND	20	PWR Out

X. ±0.50	X.° ± 2°	UNITS mm	BossConn Electronics
.X ±0.30	.X° ± 1°		
.XX ±0.10	.XX° ± 0.5°	MAT'L	TITLE: MINI DP 20P沉板母座 CH=1.0mm 板上3.7mm
.XXX ± 0.05			
THESE DRAWINGS AND SPECIFICATIONS ARE THE PROPERTY OF SHENZHEN BEILAIXING TECHNOLOGY CO.,LTD. AND SHALL NOT BE REPRODUCED, COPIED OR USED IN ANY MANNER WITHOUT THE PRIOR WRITTEN CONSENT OF SHENZHEN BEILAIXING TECHNOLOGY CO., LTD		FINISH	APPD: / DWG NO.:
		Q'TY	CHKD: / SCALE 1/1 / SHEET 1/1 / REV. A1
			DR: